TemBreak

TERASAKI
Innovators in Protection Technology

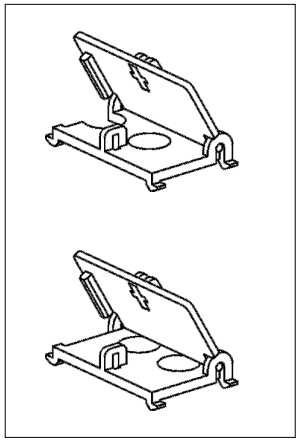

OCR Sealing cover Instruction Manual

Types: T2SF25NTA
T2SF25NEA

Please retain this manual for future reference. The Manufacturer assumes no responsibility for damages resulting from non-application or incorrect application of the instructions provided herein.

TERASAKI ELECTRIC CO., LTD.
547-0002, Japan
TEL:81-6-6791-9323/ FAX:81-6-6791-9274
Web Site: www.terasaki.co.jp
Email: int-sales@terasaki.co.jp

2H7946SAA (KRB-5315)

1 Safety Notices

Be sure to read these Instructions and other associated documents accompanying the product thoroughly to be familiarize yourself with the product handling, safety information, and all other precautions before mounting, using, servicing, or inspecting the product. In these Instructions, safety notices are divided into ⚠Caution according to the hazard level:

⚠Caution : A caution notice with this symbol indicates that neglecting the suggested procedure or practice could result in moderate or slight personal injury and/or property damage.

Note that failing to observe ⚠Caution notices could result in serious injury/damage in some situations. Because safety notices contain important information, be sure to read and observe them.

⚠Caution

- Electrical work should only be undertaken by suitably qualified persons.
- Be careful to prevent foreign objects (debris, concrete, powder, iron powder, etc.) and rainwater from entering product. These materials inside the product could cause a fire or malfunction.
- Prior to commencing any work on the product, open an upstream circuit breaker or isolator to ensure that no voltage is applied to the product. Otherwise, electrical shock may result.

2 Applicable Breaker Types

Types	Applicable breaker types
T2SF25NTA	E125,S125,H125,L125,S160,H160,L160,E250,S250,H250,L250 (Adjustable Thermal Magnetic Type)
T2SF25NEA	S250,H250 (Electronic Type)

3 Packaged Items

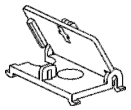

(T2SF25NTA)

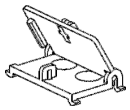

(T2SF25NEA)

4 Assembly Tools

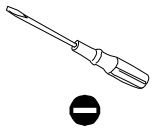

5 Assembling

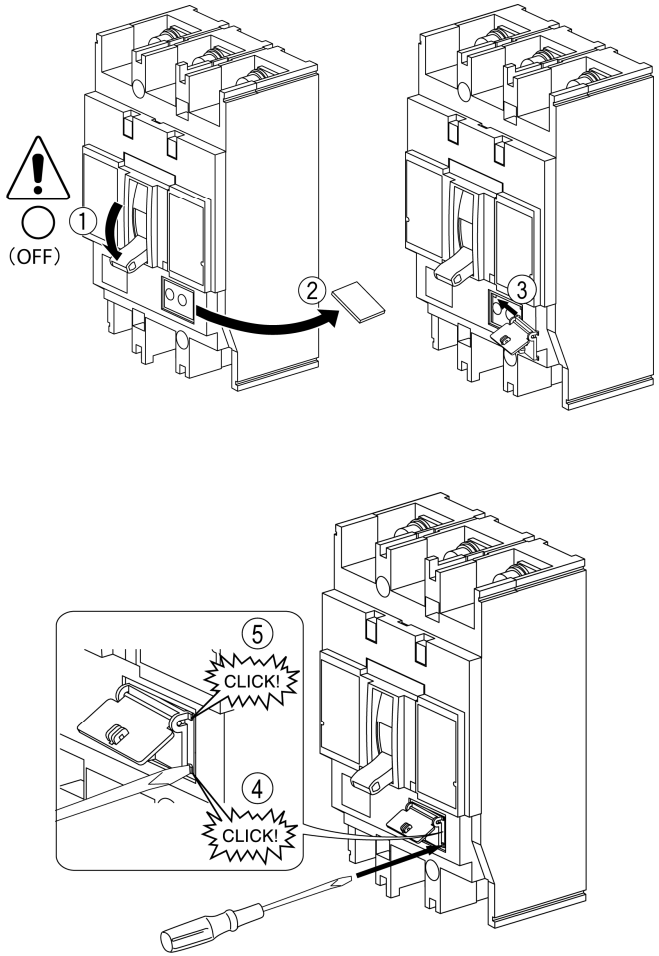

6 Sealing Procedure

①Pass wire A trough the hole of OCR Sealing cover.

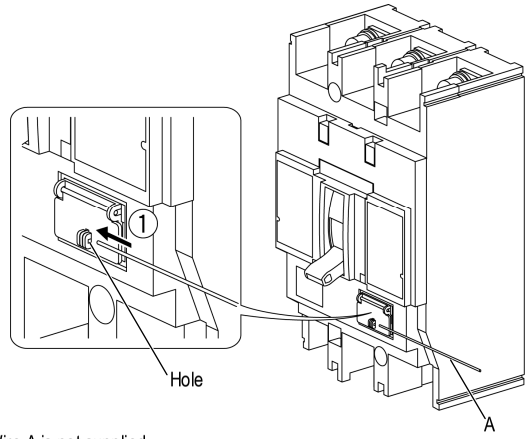

・ Wire A is not supplied.
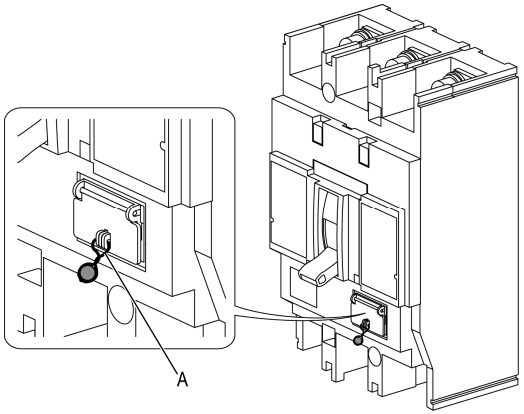
②Twist the wire A.